REPARATION

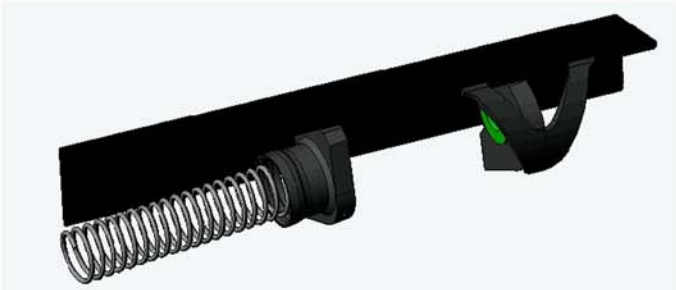

1- First, install the spring as shown.

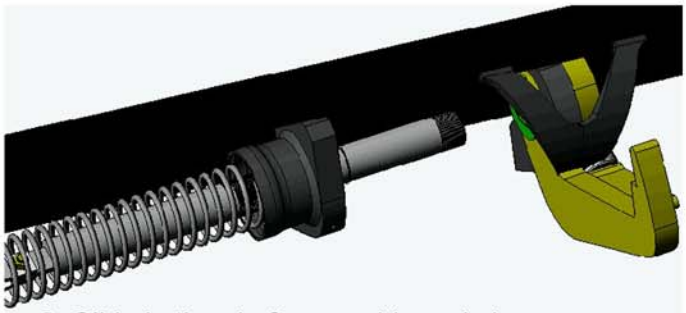

2- Slide in the shaft assembly and shove the little snap-ring overt it.

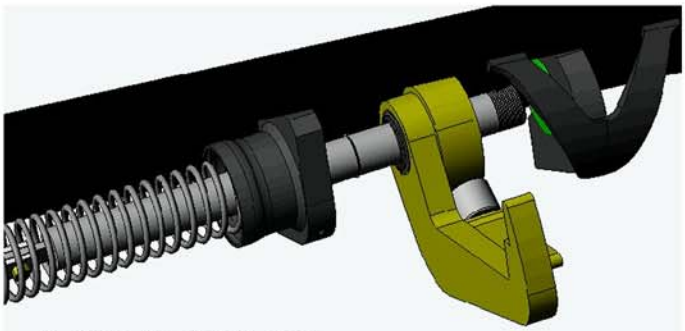

3- Slide the hook over.

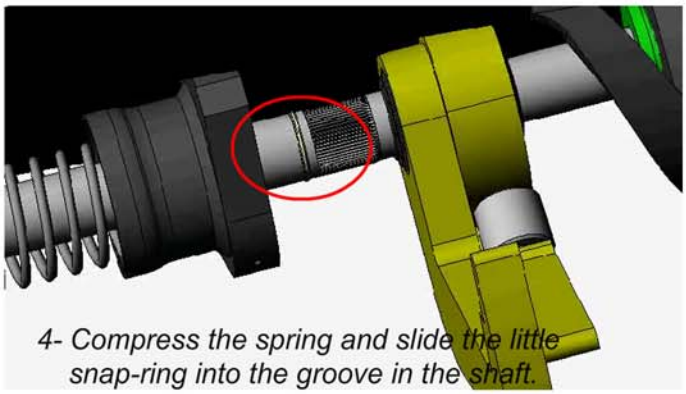

4- Compress the spring and slide the little snap-ring into the groove in the shaft.

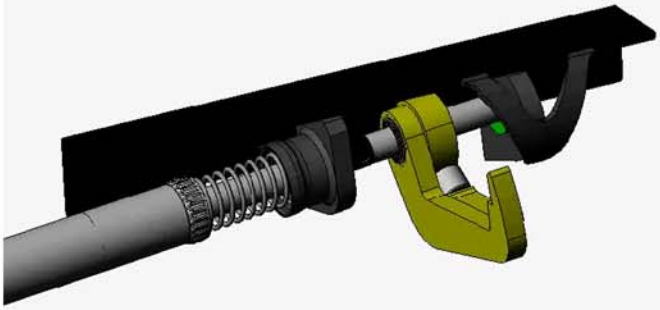

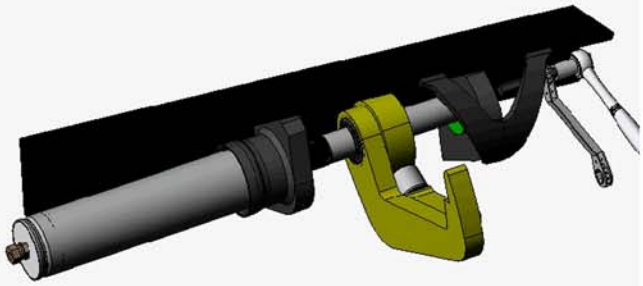

5- Put on the cylinder and crank-up the tension 3/4 turn.

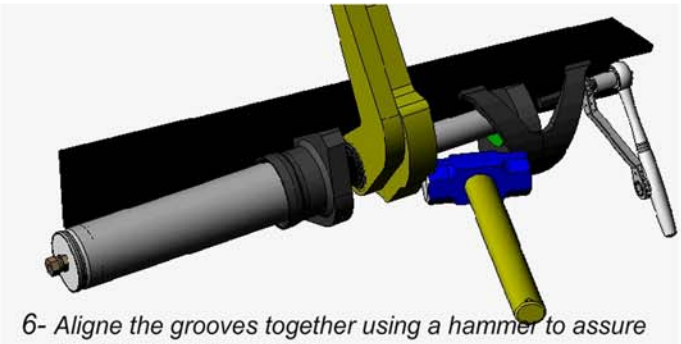

6- Aligne the grooves together using a hammer to assure the tension of the spring.

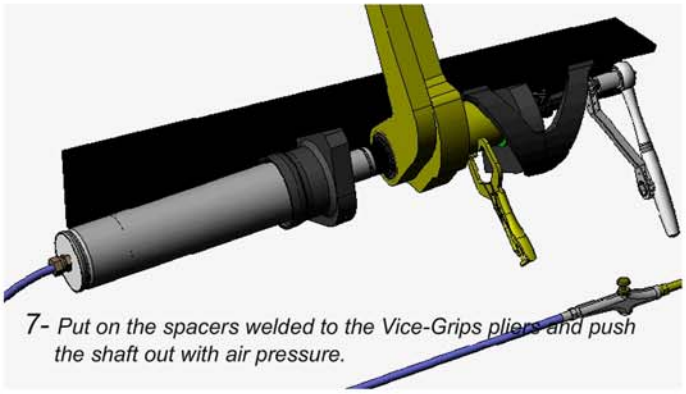

7- Put on the spacers welded to the Vice-Grips pliers and push the shaft out with air pressure.

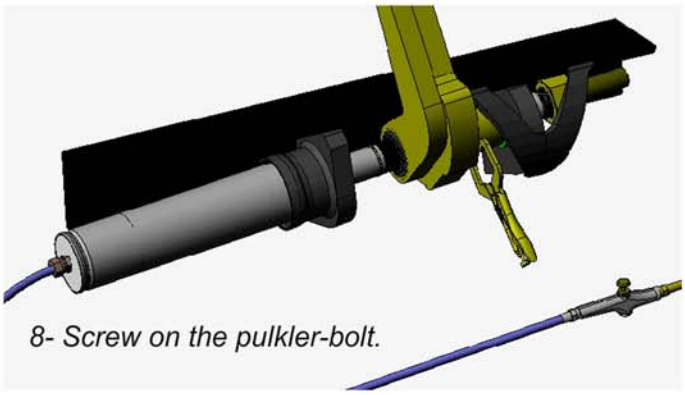

8- Screw on the pulkler-bolt.

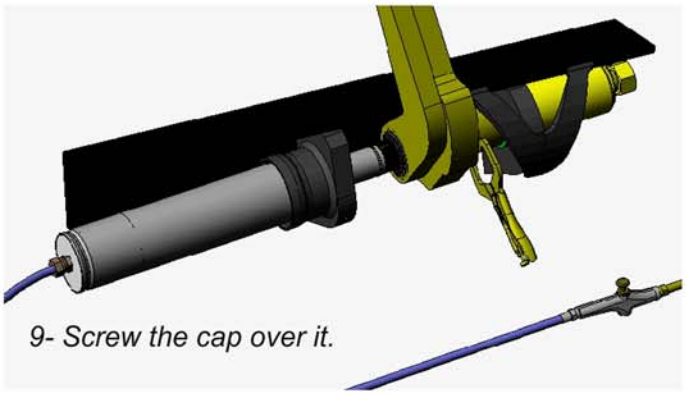

9- Screw the cap over it.

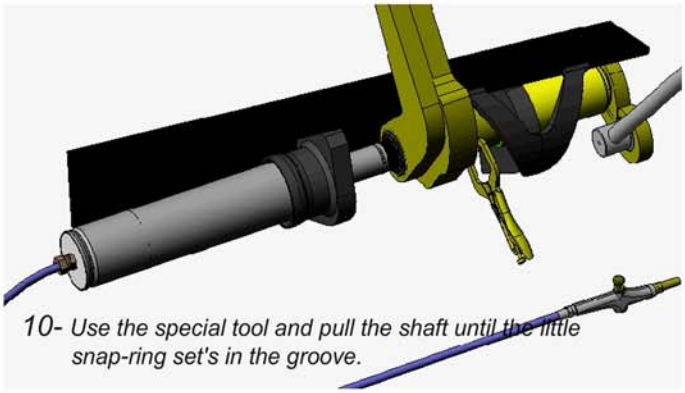

10- Use the special tool and pull the shaft until the little snap-ring set's in the groove.

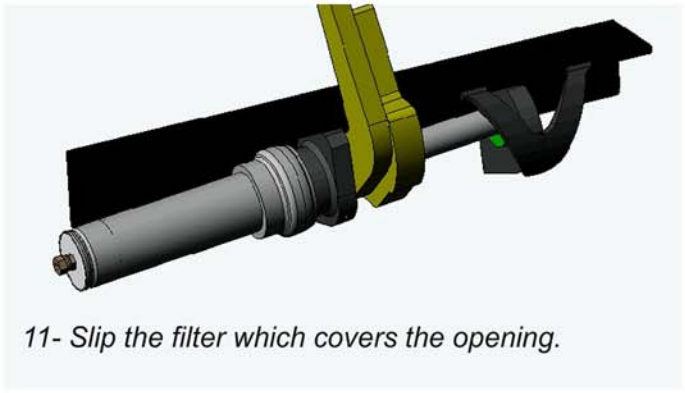

11- Slip the filter which covers the opening.